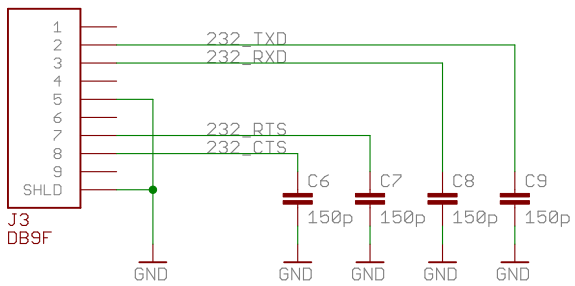
232_TXD
232_RXD
232_RTS
232_CTS
C6
150p
C7
150p
C8
150p
C9
150p
SHLD
J3
DB9F
GND

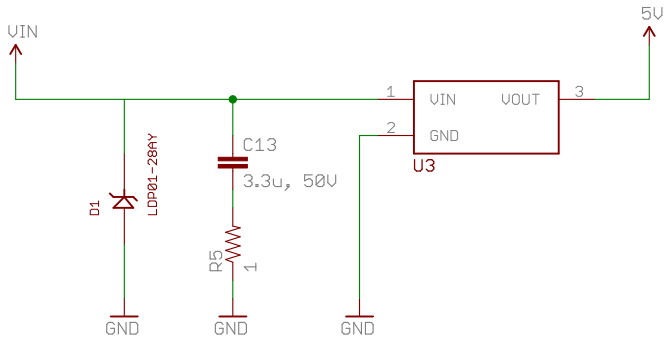
VIN
5V
VIN
VOUT
GND
U3
D1
LDP01-28AY
C13
3.3u, 50V
R5
1
GND

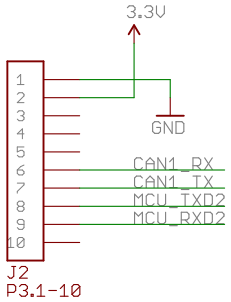
3.3V
GND
CAN1_RX
CAN1_TX
MCU_TXD2
MCU_RXD2
J2
P3.1-10

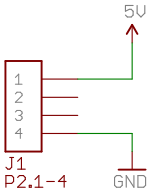
5V
J1
P2.1-4
GND

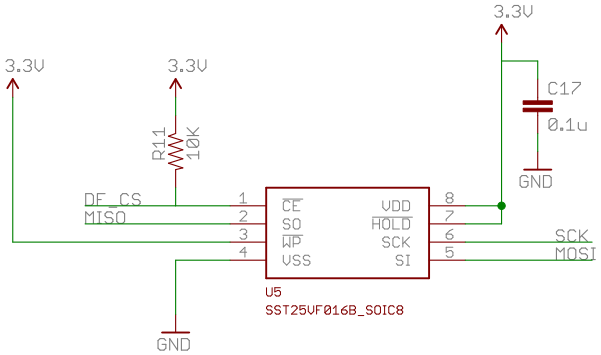
3.3V
3.3V
3.3V
R11
10K
C17
0.1u
GND
DF_CS
MISO
CE
SO
WP
VSS
VDD
HOLD
SCK
SI
SCK
MOSI
U5
SST25VF016B_SOIC8
GND

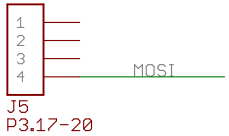
MOSI
J5
P3.17-20

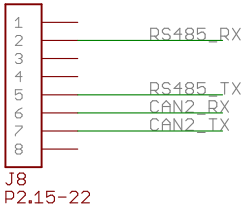
RS485_RX
RS485_TX
CAN2_RX
CAN2_TX
J8
P2.15-22

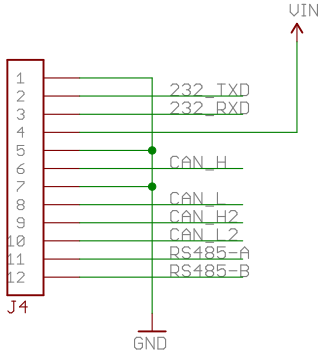
VIN
232_TXD
232_RXD
CAN_H
CAN_L
CAN_H2
CAN_L2
RS485-A
RS485-B
J4
GND

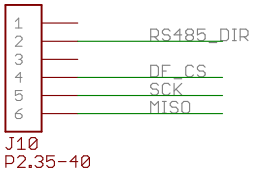
RS485_DIR
DF_CS
SCK
MISO
J10
P2.35-40

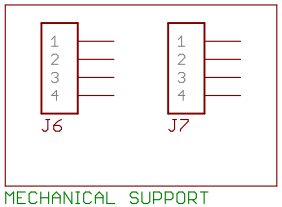
J6
J7
MECHANICAL SUPPORT

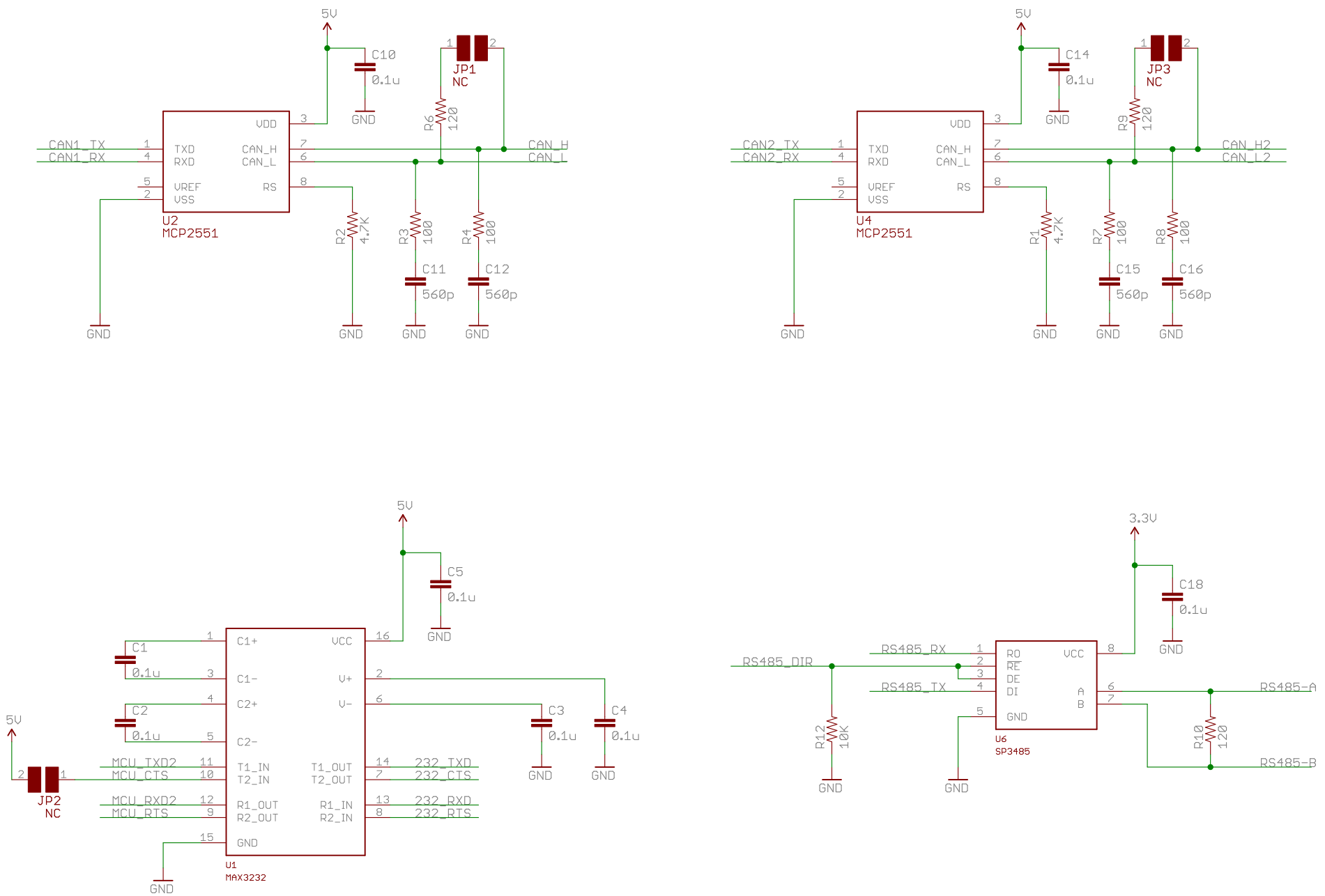
5V
C10
0.1u
GND
JP1
NC
R6
120
CAN1_TX
CAN1_RX
TXD
RXD
VDD
CAN_H
CAN_L
VREF
VSS
RS
U2
MCP2551
CAN_H
CAN_L
R2
4.7K
R3
100
R4
100
C11
560p
C12
560p
5V
C14
0.1u
GND
JP3
NC
R9
120
CAN2_TX
CAN2_RX
U4
MCP2551
CAN_H2
CAN_L2
R1
4.7K
R7
100
R8
100
C15
560p
C16
560p
5V
C5
0.1u
GND
C1
0.1u
C2
0.1u
C1+
C1-
C2+
C2-
VCC
V+
V-
T1_IN
T2_IN
T1_OUT
T2_OUT
R1_OUT
R2_OUT
R1_IN
R2_IN
GND
U1
MAX3232
C3
0.1u
C4
0.1u
5V
JP2
NC
MCU_TXD2
MCU_CTS
MCU_RXD2
MCU_RTS
232_TXD
232_CTS
232_RXD
232_RTS
3.3V
C18
0.1u
GND
RS485_DIR
RS485_RX
RS485_TX
RO
RE
DE
DI
VCC
A
B
GND
U6
SP3485
R12
10K
R10
120
RS485-A
RS485-B