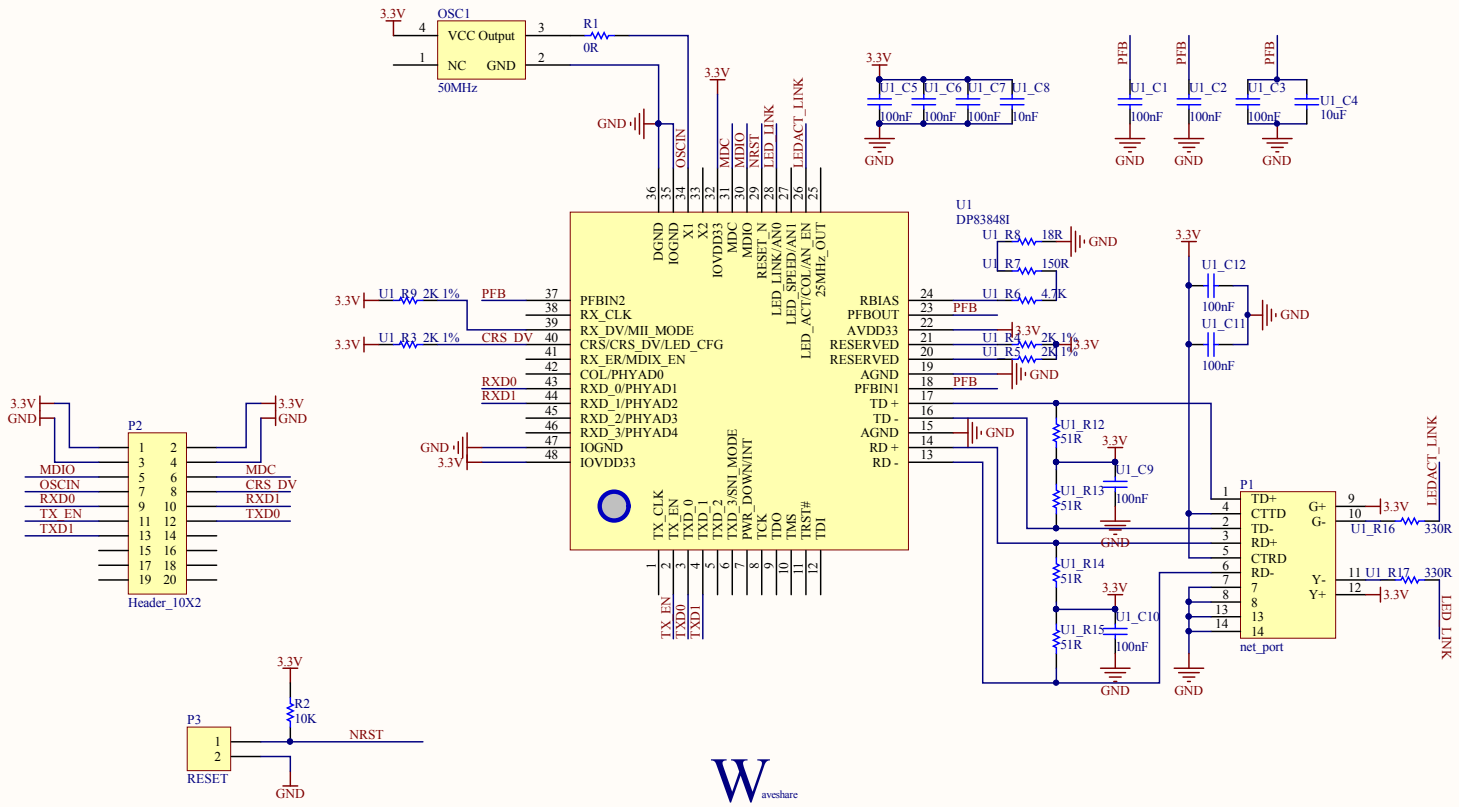
OSC1
VCC Output
NC
GND
50MHz
R1
0R
U1
DP83848I
PFBIN2
RX_CLK
RX_DV/MII_MODE
CRS/CRS_DV/LED_CFG
RX_ER/MDIX_EN
COL/PHYAD0
RXD_0/PHYAD1
RXD_1/PHYAD2
RXD_2/PHYAD3
RXD_3/PHYAD4
IOGND
IOVDD33
DGND
X1
X2
MDC
MDIO
RESET_N
LED_LINK/AN0
LED_SPEED/AN1
LED_ACT/COL/AN_EN
25MHz_OUT
RBIAS
PFBOUT
AVDD33
RESERVED
AGND
PFBIN1
TD +
TD -
RD +
RD -
TX_CLK
TX_EN
TXD_0
TXD_1
TXD_2
TXD_3/SNI_MODE
PWR_DOWN/INT
TCK
TDO
TMS
TRST#
TDI
P1
net_port
TD+
CTTD
TD-
RD+
CTRD
RD-
G+
G-
Y-
Y+
P2
Header_10X2
MDIO
OSCIN
RXD0
TX_EN
TXD1
MDC
CRS_DV
RXD1
TXD0
P3
RESET
R2
10K
NRST
LEDACT_LINK
LED_LINK
330R
3.3V
GND
PFB