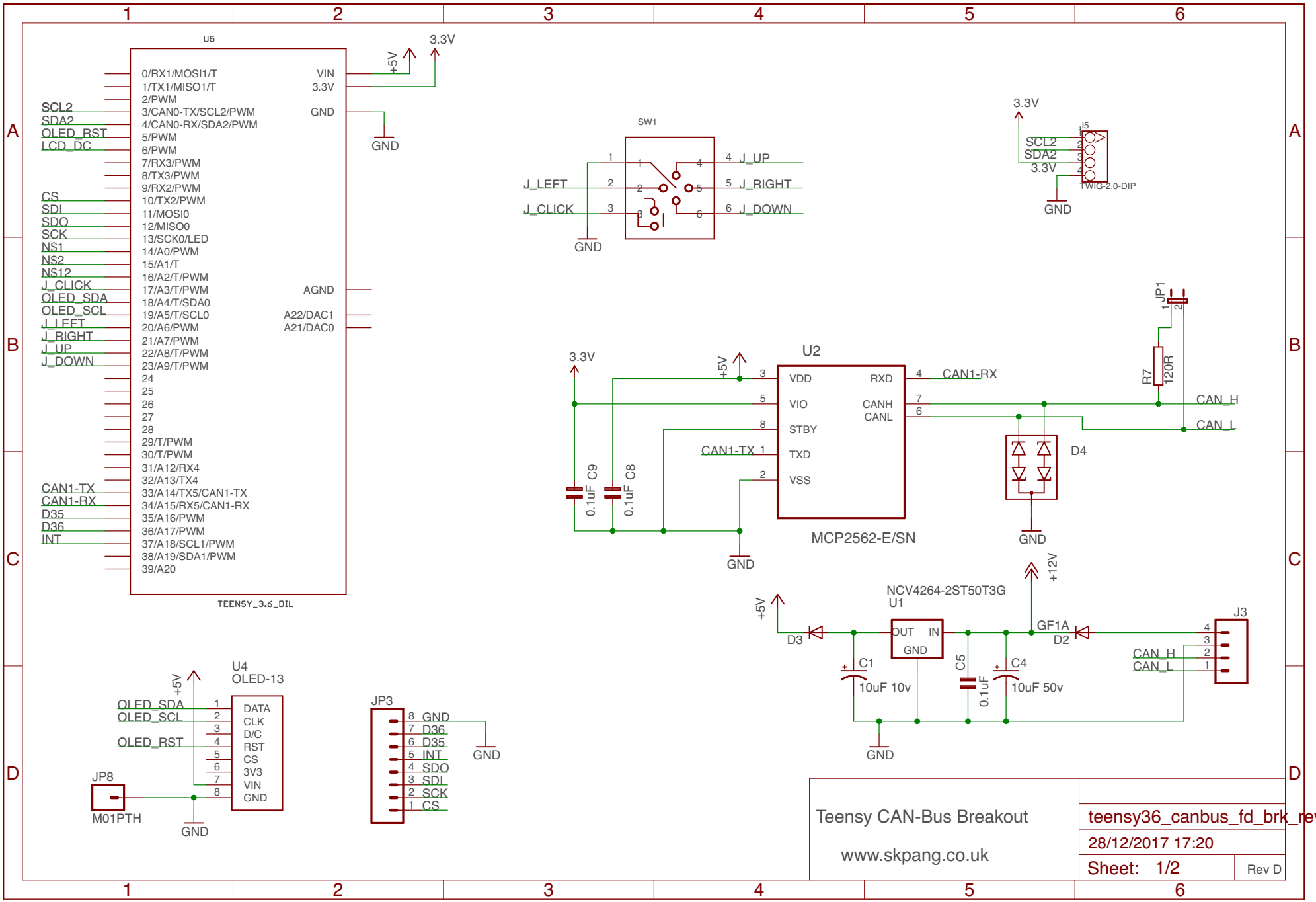
U5
0/RX1/MOSI1/T
1/TX1/MISO1/T
2/PWM
3/CAN0-TX/SCL2/PWM
4/CAN0-RX/SDA2/PWM
5/PWM
6/PWM
7/RX3/PWM
8/TX3/PWM
9/RX2/PWM
10/TX2/PWM
11/MOSI0
12/MISO0
13/SCK0/LED
14/A0/PWM
15/A1/T
16/A2/T/PWM
17/A3/T/PWM
18/A4/T/SDA0
19/A5/T/SCL0
20/A6/PWM
21/A7/PWM
22/A8/T/PWM
23/A9/T/PWM
24
25
26
27
28
29/T/PWM
30/T/PWM
31/A12/RX4
32/A13/TX4
33/A14/TX5/CAN1-TX
34/A15/RX5/CAN1-RX
35/A16/PWM
36/A17/PWM
37/A18/SCL1/PWM
38/A19/SDA1/PWM
39/A20
VIN
3.3V
GND
AGND
A22/DAC1
A21/DAC0
SCL2
SDA2
OLED_RST
LCD_DC
CS
SDI
SDO
SCK
N$1
N$2
N$12
J_CLICK
OLED_SDA
OLED_SCL
J_LEFT
J_RIGHT
J_UP
J_DOWN
CAN1-TX
CAN1-RX
D35
D36
INT
TEENSY_3.6_DIL
+5V
3.3V
GND
SW1
J_LEFT
J_CLICK
J_UP
J_RIGHT
J_DOWN
J5
TWIG-2.0-DIP
U2
VDD
VIO
STBY
TXD
VSS
RXD
CANH
CANL
CAN1-RX
CAN1-TX
MCP2562-E/SN
C9
0.1uF
C8
0.1uF
JP1
R7
120R
CAN_H
CAN_L
D4
NCV4264-2ST50T3G
U1
OUT
IN
GND
+12V
GF1A
D2
D3
C1
10uF 10v
C5
0.1uF
C4
10uF 50v
J3
U4
OLED-13
DATA
CLK
D/C
RST
CS
3V3
VIN
GND
JP8
M01PTH
JP3
D36
D35
INT
SDO
SDI
SCK
CS
Teensy CAN-Bus Breakout
www.skpang.co.uk
teensy36_canbus_fd_brk_rev_B
28/12/2017 17:20
Sheet: 1/2
Rev D

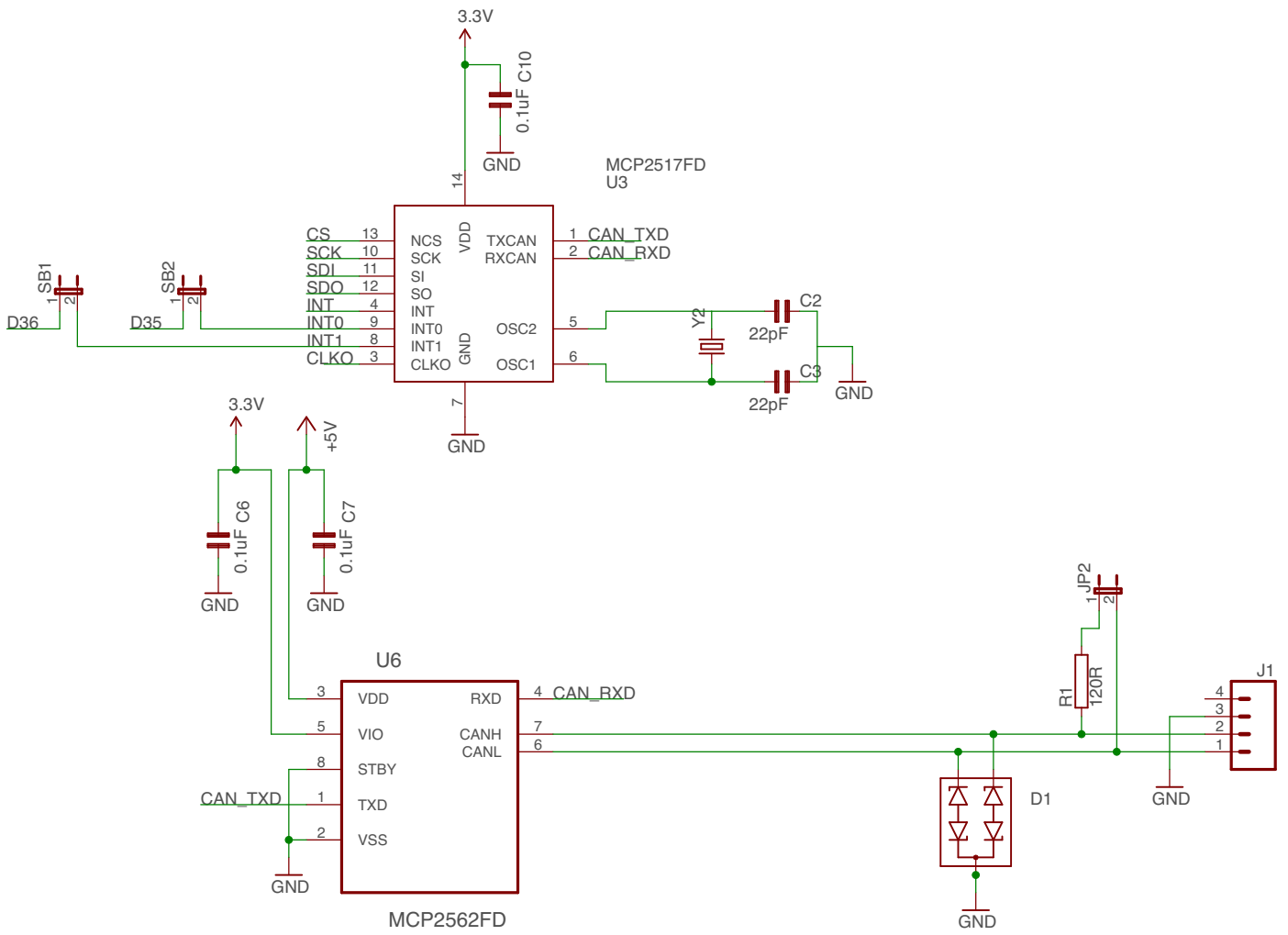

teensy36_canbus_fd_brk_rev_B

28/12/2017 17:20

Sheet: 2/2